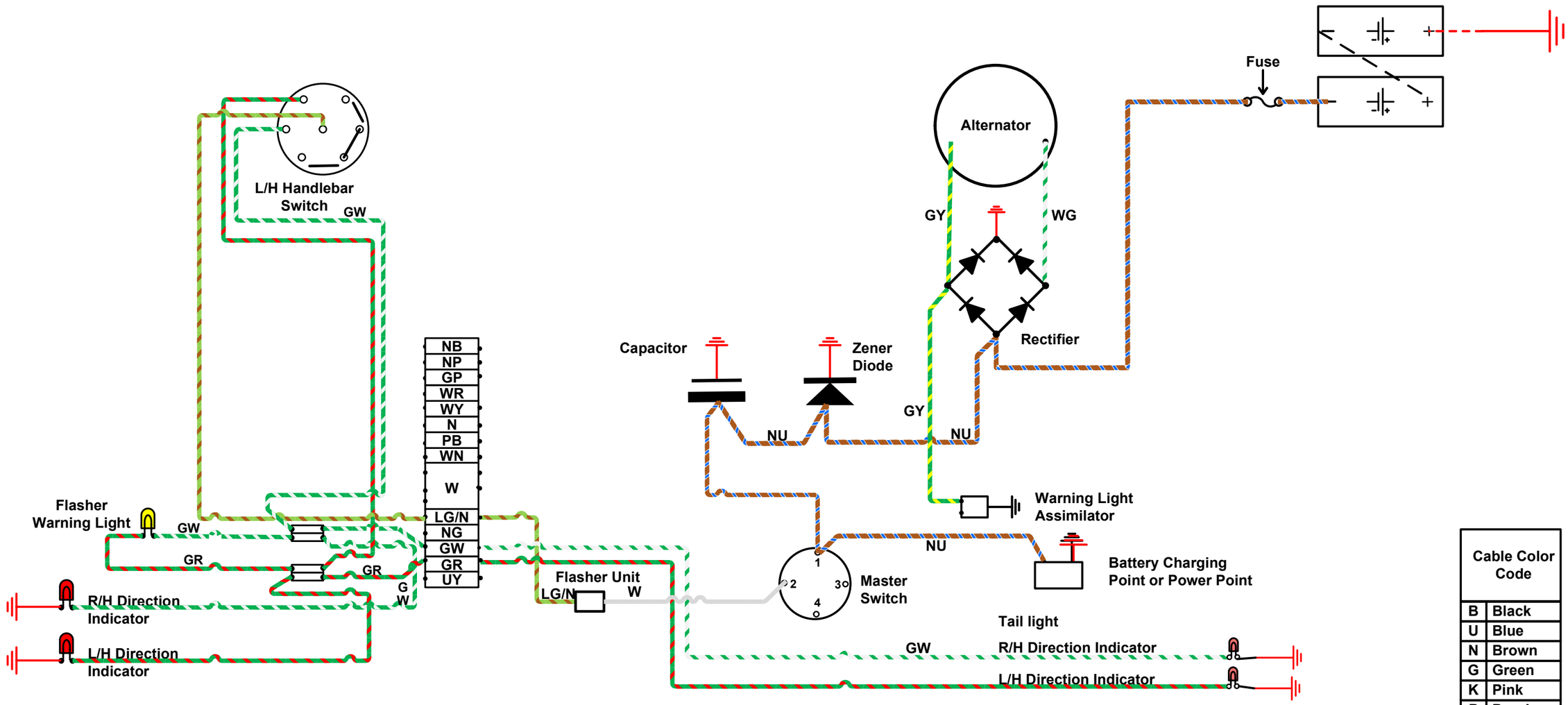

Cable Color Code	
B	Black
U	Blue
N	Brown
G	Green
K	Pink
P	Purple
R	Red
S	Slate
W	White
Y	Yellow
D	Dark
L	Light
M	Medium

1972 Commando

- Turn Signal Circuits -

(with power sources)